FISH MATE® 5000 / 7000 / 9000 CE

Pond Pump · Instructions www.pet-mate.com +44 (0)1932 700 001

IMPORTANT SAFETY INSTRUCTIONS

WARNING - To guard against injury or death, basic safety precautions should be observed, including the following:

READ AND FOLLOW ALL SAFETY INSTRUCTIONS

- Register your purchase on-line at **www.pet-mate.com/uk** (see guarantee overleaf).
- All electrical work must be carried out by a competent electrician.
- Check that the voltage label on the motor (H) (see Fig. 1) conforms with your supply voltage.
- The pump MUST be wired into an R.C.D./G.F.I. circuit breaker (maximum 30mA) and a 3 AMP (maximum) fuse. Ensure breaker is regularly tested in accordance with manufacturers instructions.
- Connection to the power supply should be made through a suitable dry weatherproofed 3 pin plug or double pole switched enclosure with minimum 3mm (1/8") contact separation in all poles. If product is hard wired to electrical supply this must comply fully with the wiring regulations of the national and local electricity authority. The pump must be protected by a 3 AMP (maximum) fuse.
- This appliance must be earthed. It is essential that all connections are securely made using the following code:

  Brown - Live
  Blue - Neutral
  Green/Yellow - Earth
- Do not carry or pull the pump using the supply cord.
- Disconnect electrical supply from all appliances in the pond including pumps and filters before contact with the pond water or pump.
- Maximum operation depth is 1.5m (5').
- Closely supervise children when near to pond or pond equipment.
- Use pump only for ponds - do not use pump in connection with swimming pools, showers, etc.
- Use conduit approved by your electricity authority to protect supply cord where damage from gardening equipment, children and animals may occur.
- Discard pump if motor (H) shows visual defects (e.g. cracks or swelling).
- The supply cord of this appliance cannot be replaced; if the cord is damaged the appliance should be discarded.
- Do not allow the pump to run dry.
- Do not operate the pump in freezing conditions. Remove, disassemble and dry pump if there is a risk of pump being frozen.
- This pump is provided with a thermal cut-out switch that temporarily switches off the pump in case of overheating. The pump may restart when it has cooled.

SAVE THESE INSTRUCTIONS

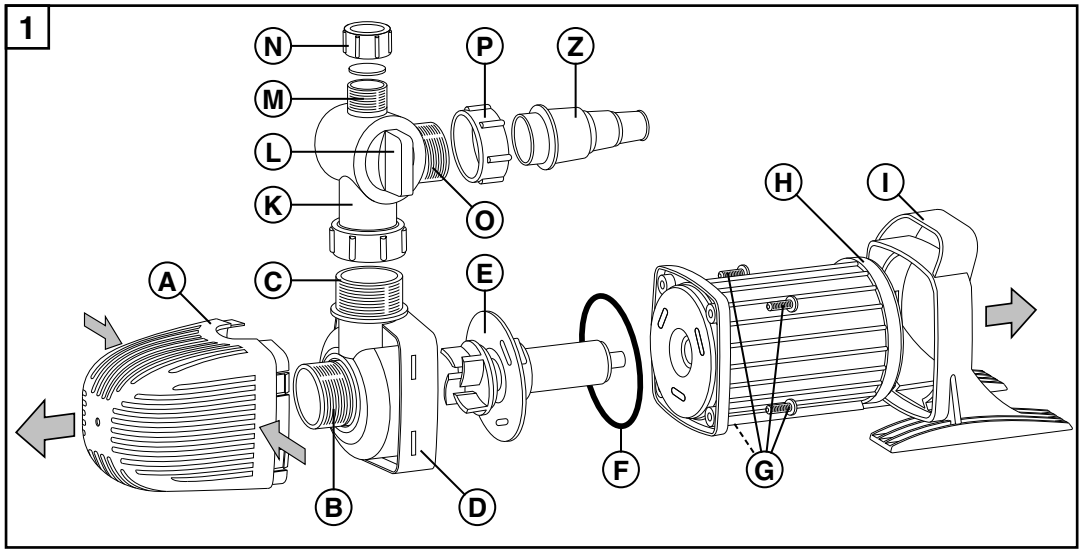

IMPORTANT - READ BEFORE USE

1. PUMP INSTALLATION

Ideally and for convenience the pump should be positioned within reach of the side of the pond on a solid platform (e.g. paving slabs). The pump must be at least 200mm (8") below water level to avoid problems of freezing and low water levels in summer (Fig. 4).

Only use pump if completely immersed in water.

A. Waterfall/Filter Only

For use with a pond filter you will often get improved results with the pump sited at the opposite end of the pond to the filter return.

The pump comes as standard with pond-life friendly 3mm (1/8") slots to help protect spawning life. In some ponds this may not be necessary and you may want to modify the pump to enable solids-handling as below.

The pump may be connected to a waterfall or filter using 19mm (3/4"), 25mm (1") or 32mm (1 1/4") bore hose. For maximum flow use 32mm (1 1/4") hose connected directly to the hose adaptor (Z), nut (P) and pump outlet (C).

If a horizontal outlet is required or flow rate needs to be controlled fit flow valve (K) with hose adaptor (Z) and nut (P) into pump outlet (C). Fit blanking plug (N) to vertical fountain outlet (M) and adjust flow using the flow control knob (L).

• **Solids-handling** - Remove strainer cover (A) by squeezing sides and pulling off as shown by the three arrows in Fig. 1. With a sharp knife cut alternate ribs on bottom of cover (A) as shown in Fig. 2.

Reassemble and position pump at the bottom of the pond.

B. Fountain (and Waterfall/Filter)

Insert fountain components as shown in Fig. 3a (conventional fountain) / 3b (bell fountain). If required tube (T) may be shortened with a hacksaw. For plume fountain do not fit any parts to tube (T). If using waterfall/filter, connect waterfall/filter to horizontal hose adaptor (Z). Adjust fountain height/width using the flow control (L) turning clockwise for increased height. If using the bell fountain you will also need to manually adjust the gap between parts (X) and (W) for the required effect. (Try starting with approximately 1mm (1/16") gap.) The Fountain heads may be unscrewed anticlockwise for cleaning.

2. MAINTENANCE/TROUBLESHOOTING (see Fig. 1).

IMPORTANT SAFETY INSTRUCTIONS

- ***Disconnect electrical supply from pump before removing from pond or contacting pond water.***
- ***Do not carry or pull the pump by the cable.***

A. When flow from your pump is noticeably reduced or fountain display has deteriorated:

i) Remove strainer cover (A) by squeezing sides and pulling off as shown by the three arrows in Fig.1. Clean cover (A) and remove any weed or blockage around pump inlet (B).

ii) If you are using a fountain, remove and clean fountain head in water with a brush.

iii) Reassemble. If flow is still poor check to see if outlet pipe has become kinked or blocked.

B. If flow is stopped (check power supply first!):

i) Disconnect power.

ii) Remove cover (A) and check for free rotation/ breakage of impeller (F).

iii) If impeller will not turn or is broken, pull off handle (I) as shown in Fig. 1. Undo 4 screws (G) and remove pump body (D). Finally pull out impeller assembly (E) and replace if broken or worn. If in doubt contact Pet Mate Customer Service. Reassemble in reverse order after careful cleaning of all components.

iv) Replace the pump in water before reconnecting power to start pump. If pump does not start or stops again please contact Pet Mate Customer Service.

GUARANTEE

Pet Mate Ltd. guarantees your product for a period of 3 years from the date of purchase, subject to the registration of your purchase details on our website **www.pet-mate.com/uk** within 14 days of purchase. (If you do not have access to a computer, please send details of your purchase with copy of receipt along with your name and address.) In the event of a fault developing contact Pet Mate customer services for a returns authorisation number. The guarantee is limited to any defect arising due to faulty materials or manufacture. Any defective item will be repaired or replaced free of charge at the manufacturer's discretion, provided that the defect has not been caused by neglect, misuse or normal wear and tear. The guarantee excludes moving parts and claims arising from frost, accidental damage or loss of fish. Your statutory rights are not affected.

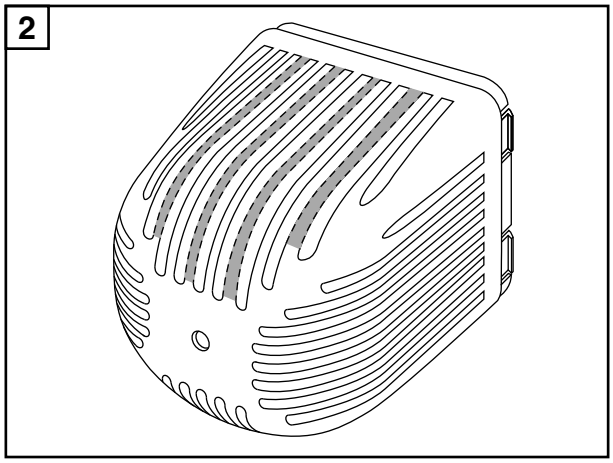

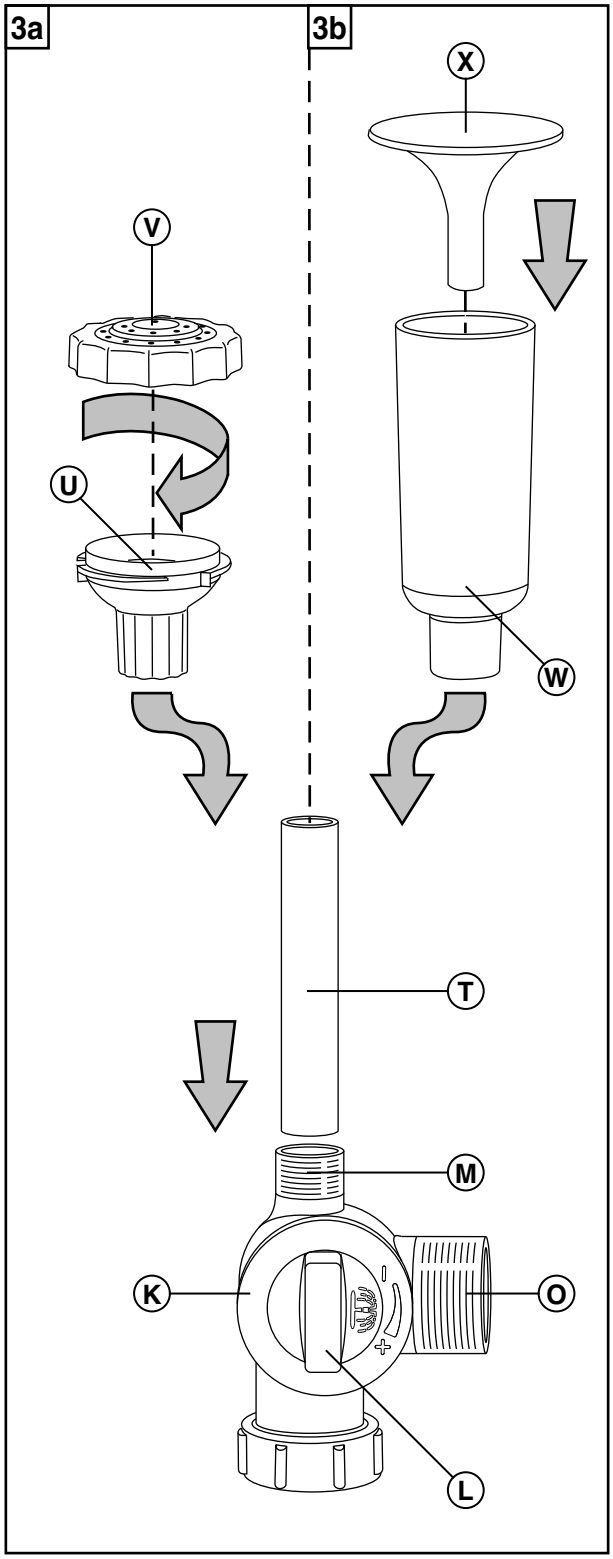

37706/0515